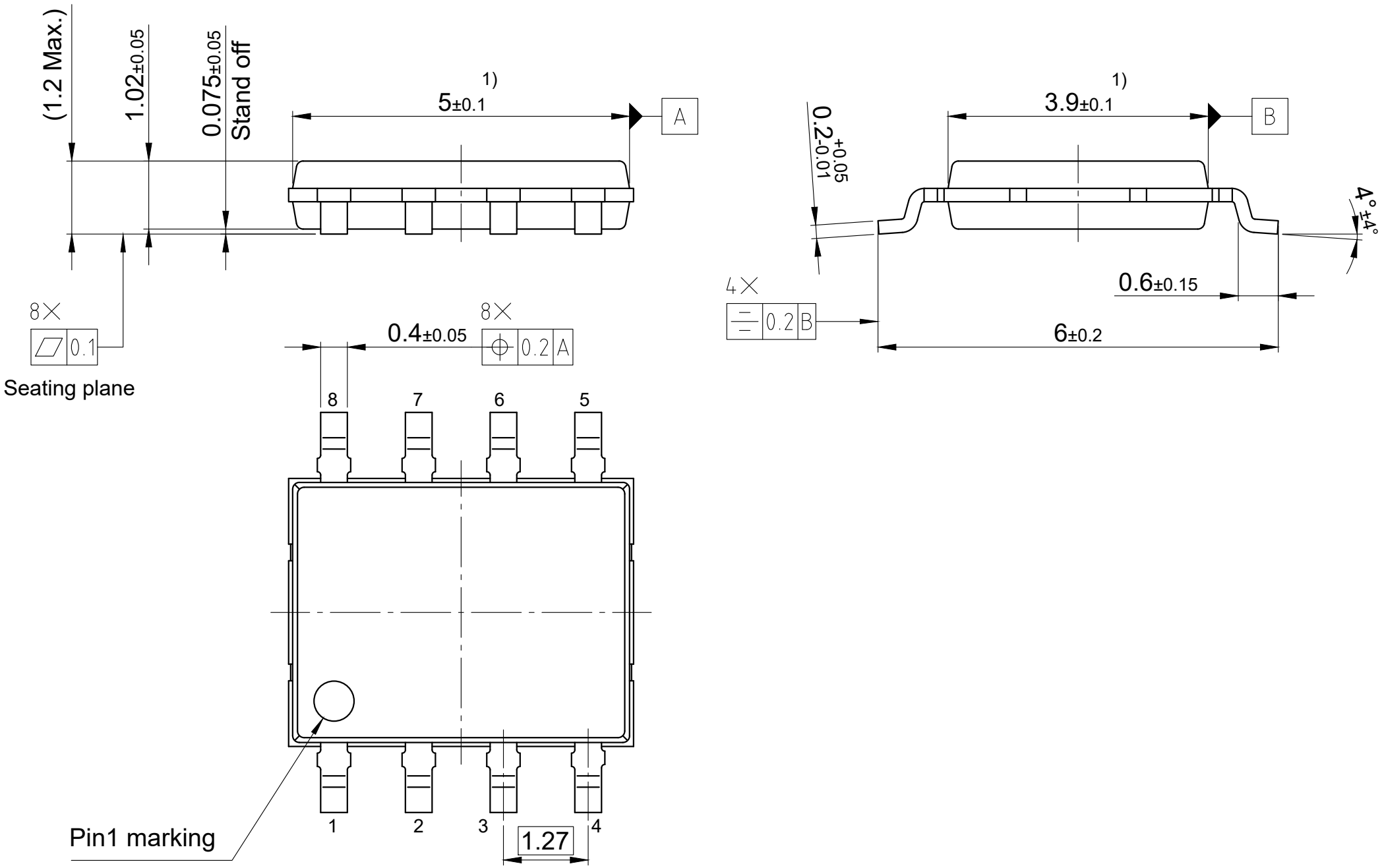


1) Outer dimension does not include protrusion or intrusion of 0.15 per side
All dimensions are in units mm
The drawing is in compliance with ISO 128-30, Projection Method 1 [ ]
Drawing according to ISO 8015,general tolerances