REV.	DESCRIPTION	ECN	DATE
A	INITIAL RELEASE	1120_ER6904	4–3–20

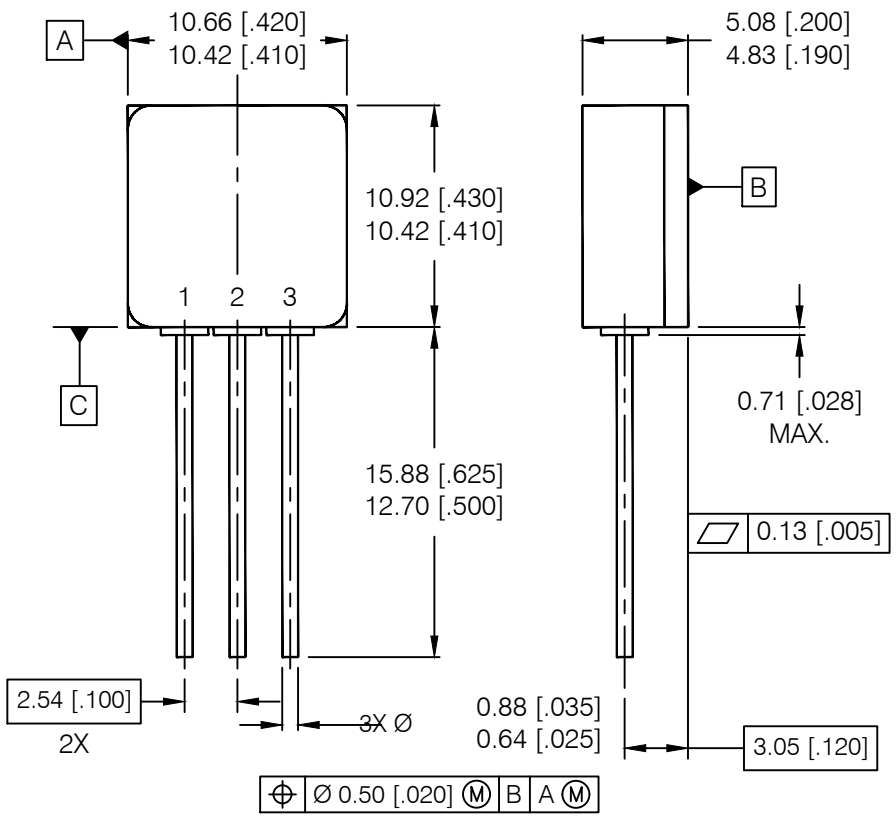

NOTES:

1. DIMENSIONING & TOLERANCING PER ANSI Y14.5M-1994.
2. CONTROLLING DIMENSION: INCH.
3. DIMENSIONS ARE SHOWN IN MILLIMETERS [INCHES].
4. TO-257AA TABLESS IS A MODIFIED JEDEC OUTLINE TO-257AA.
5. STANDARD FINAL FINISH ON ALL TERMINALS IS SOLDER ALLOY 63%Sn 37%Pb.

IOR HiRel
An Infineon Technologies Company

TITLE: TO–257AA TABLESS PACKAGE OUTLINE (STD & LOW OHMIC)

DRAWING NO. D100762G–WEB

REV A